REVISION HISTORY			
REV.	DESCRIPTION	DATE	DRAWN BY
1	ORIGINAL PRINT	12/6/2018	D. BLAU
2	UPDATED TO AMDS-1	5/20/2022	T. JORGENSEN

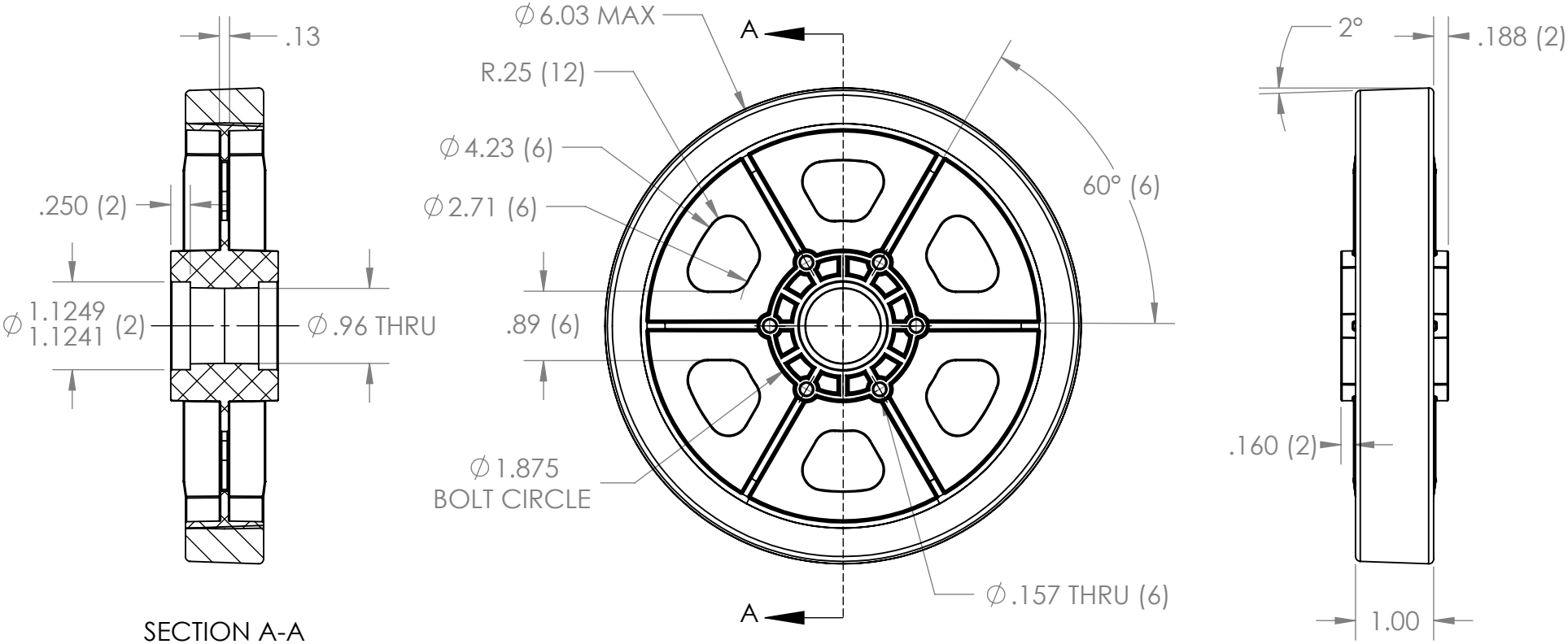

*** SEE CAD FOR ADDITIONAL TOOLPATH INFO***

UNLESS OTHERWISE SPECIFIED:	COMMENTS:			AndyMark
DIMENSIONS ARE IN INCHES	DUAL DIMENSIONS ARE IN MILLIMETERS.			TITLE:
TOLERANCES: FRACTIONAL ±1/16 ANGULAR: MACH ±1° ANGULAR: BEND ±5° ONE PLACE DECIMAL ±0.1 TWO PLACE DECIMAL ±0.01 THREE PLACE DECIMAL ±0.005 FOUR PLACE DECIMAL ±0.0005	BREAK ALL SHARP EDGES.			6IN SMOOTH GRIP WHEEL
MATERIAL PC CORE TPU OVERMOLD		NAME	DATE	SIZE A / DWG. NO. am-0144a / REV 2
	CHECKED	NL	5/23/22	
FINISH DEBURRED	ENG APPR.			
	MFG APPR.			
DO NOT SCALE DRAWING	Q.A.			SCALE: 1:2 / SHEET 1 OF 1

5 4 3 2 1